Andrena Dropped Lens

SURFACE

TYPE

PROJECT

Overview

- Andrena an'drena Noun: a genus of burrowing solitary bees, including important pollinators of economic plants.
- Andrena was originally designed to recreate a slice out of a beehive. The unique detail of the single, double, triple, and quadruple connectors was an engineering challenge. Once finished, the design team received accolades from not only the architect, lighting designer…but the electrical contractors as well because of the ease of installation. Another unique characteristic of the Andrena is the double thick lens, it gives the luminaires a neon look, in appearance.
- DESIGNER SELECTIONS
- Andrena Series has 1 profile size, two and seven eighths' inches in height, by one and eleven sixteenth inches in width.
- Andrena can be painted in all one finish, or design connectors in one finish, and extrusions in different finish to create a modern look.
- Andrena Series has multiple choices for canopies and colors, just scroll down for your choices.
- Andrena Series is available in almost any CCT available in the market, we've selected the most popular, but don't let that stop you from asking for something different.
- Andrena Series is available in direct light only. We can also tune in our drivers to specific lumen output, if required.
- Andrena Series is always available for your project's special customization needs, such as triangles, squares, rectangles, and others, not only beehives!
- Andrena Series qualifies as "Made in America", "American Made" and is part of our ECO sustainable end of life program.
- Please be advised that our Andrena Series is available in Surface, Pendant and Wall.
- For all: ies files, pictures, instructions, rfa files, and warranties…scroll to bottom.

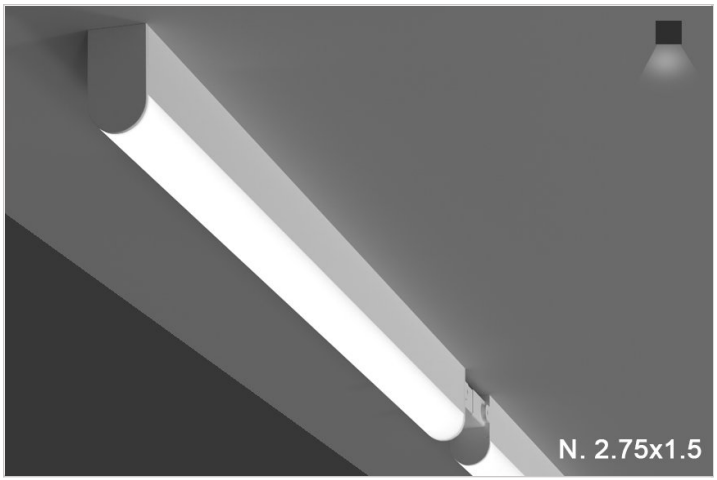

Andrena Dropped Lens

SURFACE

TYPE

PROJECT

Ordering Format

PART NUMBER: AND-SD

Size	Lumens Direct	CCT Available	CRI Available	Direct Optics
3 = 3 Feet **4** = 4 Feet **5** = 5 Feet **6** = 6 Feet **7** = 7 Feet **8** = 8 Feet **CL** = Custom Length, add in notes	**D3** = 350 LPF **D5** = 500 LPF **D7** = 750 LPF **D10** = 1000 LPF	**27** = 2700 Kelvins **30** = 3000 Kelvins **35** = 3500 Kelvins **40** = 4000 Kelvins **TW** = Tunable White 2700-5000 Kelvins	**80** = 80-85 CRI **90** = 90-95 CRI	**OW** = Opal White

Mounting	Driver / Voltage	Fixture Finish	Options
SM = Surface Mount	**ND 1** = Non-Dim Universal 120VAC **ND 2** = Non-Dim Universal 277VAC **ZT 1** = 0-10v dimming 120v dual 1% **ZT 2** = 0-10v dimming 277v dual 1% **LE1** = Lutron EcoSystem 1% DLC EE CCR / PWM SoftOnFadeToBlack **CC** = Custom Control - Add in notes	**W** = Standard White **BK** = Standard Black **SVR** = Standard Silver **RAL** = Enter RAL or Pantone in notes **CW** = Standard Wood Finish - see wood PN # enter in notes. **SW** = Special pattern submitted by designer	**AWN** = Lutron Athena Wireless Node (RF only) **AWNS** = Lutron Athena Wireless Node (with Sensor) **OS** = Occupancy Sensor **IW** = Inverter Wiring **2C** = 2 circuit wiring Direct /Indirect **CA** = Custom Angle Joiner, add in notes **EMD** = Emergency Driver - Battery Backup 120-277VAC

NOTES

ORDER NUMBER:

Andrena Dropped Lens

SURFACE

TYPE

PROJECT

Construction & Mounting

HOUSING
Extruded aluminum housings are supplied in nominal lengths of 3-8 feet. Easy access to driver and LED boards. End caps are extruded,milled aluminum. The detail of making a single hexagon verses multiple is in the joiners. Making a single hexagon we would use only a 2 side joiner as opposed to a 3 side joiner for making a web of hexagons. Wiring is supplied with quick feed through connectors for a contractor friendly installation. Custom sizes are available.

REFLECTOR
Integral powder-coated LED housing with excessive reflectivity for increased lumen output

OPTICS
Extruded acrylic lens formulated for LED light sources. Slide in/out guide for removal.

FINISH
Standard powder-coated colors are white,black and silver. Custom processed wood finishes, aluminum anodized finishes, chrome/gold plating and custom finishes are available as well. We also accept RAL and Pantone numbers for powder-coating color choices.

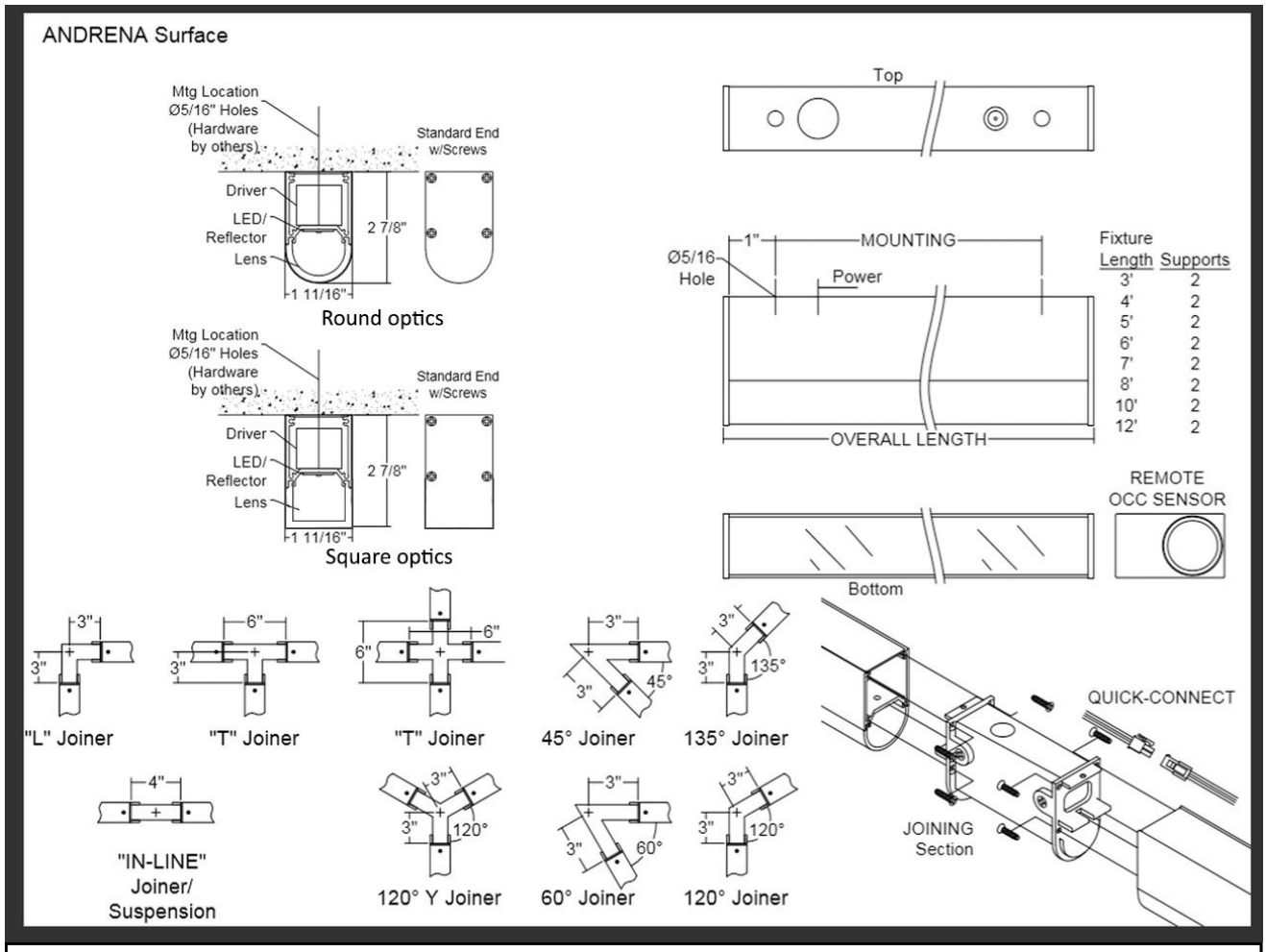

Andrena Dropped Lens

SURFACE

TYPE

PROJECT

image not found

Andrena Dropped Lens

SURFACE

TYPE

PROJECT

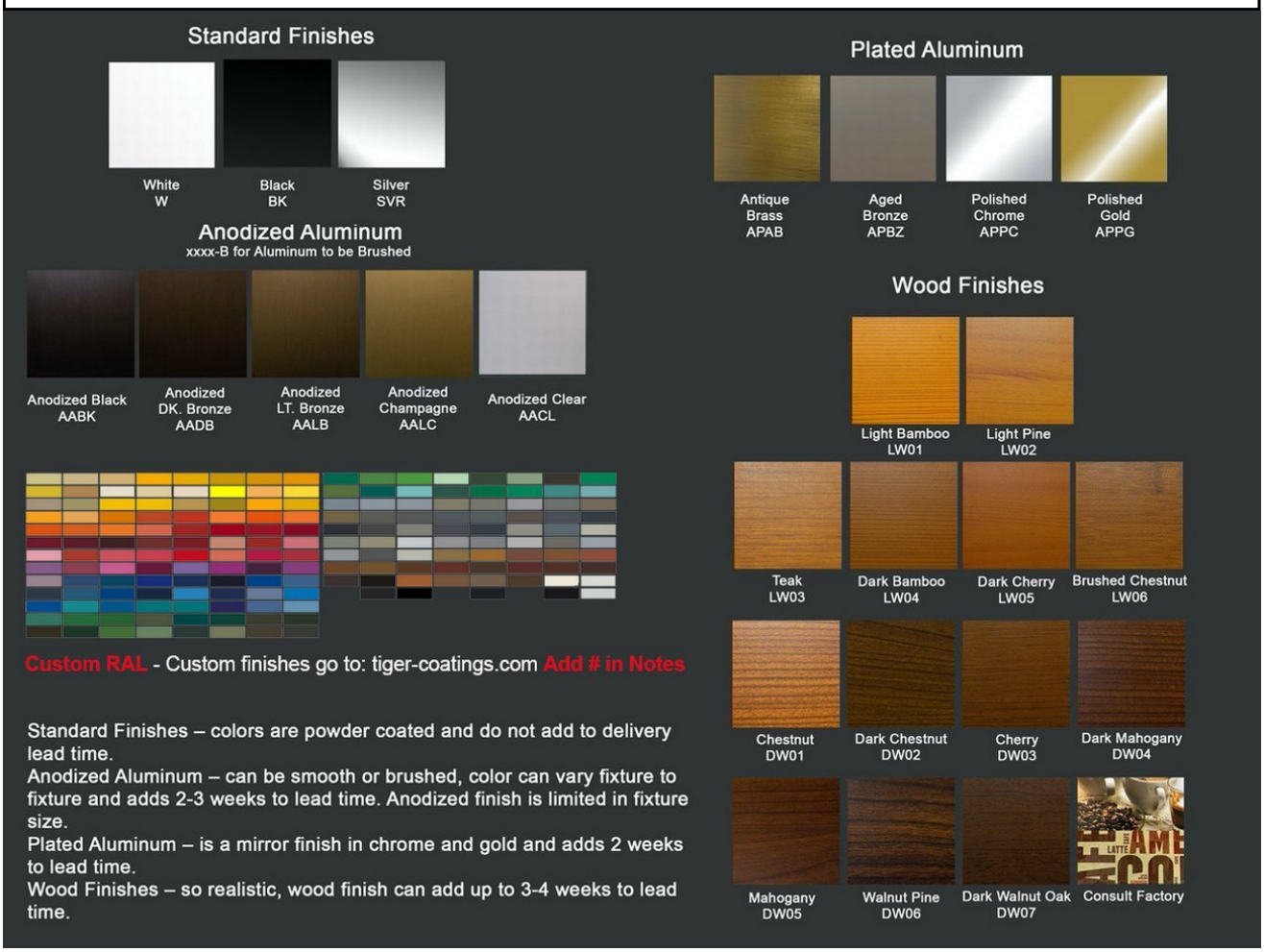

Andrena Dropped Lens

SURFACE

TYPE

PROJECT

Electrical / Driver

- Drivers - Our drivers are specifically selected based on fixture application to ensure ultimate reliability and long life. We use only UL recognized brands of LED drivers. Our LED drivers feature HPF (high power factor), universal voltage 110 - 277 VAC and include 0-10V dimming. Please note, 277v has longer distances from power feed to power feed then 120v.
- If required, we can supply premium drivers such as Lutron, Eldoled and others upon request. Advanced control systems compliant drivers such as POE,DALI, DMX, etc. are also available, please consult factory.
- Rated life (90% survivorship) of 50,000 hours at 50º C max. ambient (and 70º C max. case) temperature. At maximum driver load: Efficiency >84%, PF>0.9, THD
- POE - We are working with Molex/Igor POE systems. We can add a POE driver into our fixtures or remote them. Based on the fixture you select, we will notify you (or you can contact the factory) to see if we can install the P-driver or the P-driver needs to be remote. Just add POE1 in the spec and we will advise. Please keep in mind you need to specify a complete POE control system before specifying POE1.
- Our LED drivers feature HPF (high power factor), universal voltage 110 - 277 VAC and include 0-10V dimming.
- Emergency drivers are factory installed as an option, long life, high temperature, recyclable Ni-Cad battery pack with test switch and charge indicator. EMR is minimum of 90 minutes operation to meet code.
- Whip - Six feet long, wiring RHOS/Reach Compliant, 18 gauge, 600v rated, Specify wired to the fixture as an OPTION.

LED Perfomance

LED Output	CCT Color Temp	Watts	Lumens	Lumens per Watt	CCT Multiplier
Low	3000	3.03 WPF	350 LPF	115 LPW	2700 = .95
Medium	3000	4.38 WPF	500 LPF	114 LPW	3000 = 1
High	3000	6.7 WPF	750 LPF	112 LPW	3500 = 1.01
Very High	3000	9.18 WPF	1000 LPF	109 LPW	4000 = 1.03

- The table above is a quick reference. When calculating loads make sure you add direct and indirect LPW to get total wattage. Please refer to photometric report for detailed information.
- Our light engines are precisely designed for optimal operation of LED assemblies.
- Our standard LED's CCT (correlated color temperature) range is 2700K to 4000K. Other CCT values are available upon request.
- We log LED bin codes for each project we supply to ensure color consistency and keep a record of those projects for future reference.
- CRI offered is 80+, and 90+ Note: on 90+ CRI use .85 multiplier
- Tunable white, warm dim and other special LED colors available.
- Custom Lumens Available
- We design our own printed circuit boards to ensure high luminescence efficiency, low thermal resistance and long-term reliable operation.
- Light engines are easily replaced.
- We use only recognized brand LED's with 3 SDCM (standard deviation color matching) with high color consistency. 2 SDCM available upon request.
- If you require a special LED manufacturer, please contact us. LED chip manufacturers used by Picasso are primarily (but not limited to) Nichia, Cree and Samsung.
- LRP - “LED Reel Program” – LED’s for printed circuit boards come on reels’ like old 8mm projectors and they're sold in lots just like fabric. At Picasso Lighting, we have a program where we make sure all of your reels come from the same lot for each project. This ensures excellent color consistency in large open spaces.
- LED life is rated at 50,000 hours

Certifications & Warranties

Andrena Dropped Lens

SURFACE

TYPE

PROJECT

- Limited five-year (50,000 hours) warranty on all products. Limited ten-year (100,000 hours) warranty on all Lutron drivers.
- DLC listed products will have DLC Logo.
- Chicago Plenum and IC products are available upon request.
- Warranty does not cover damage caused by transport, damage caused by using the fixture in an area it is not UL rated for, damage caused by negligence, lack of maintenance, attempts to repair by unqualified or unauthorized personnel, by using non-original accessories/parts, fixtures installed in systems without power surge protection.
- UL and CUL listed for dry and damp locations.
- IBEW USA Union All fixtures are IBEW manufactured and assembled in the USA.
- We manufacture based on approved spec sheets and submittals signed by professionals responsible. Change orders must be in writing and will delay delivery.
- Picasso Lighting must receive in writing any thought to be defective products discovered, no later than 4 weeks from delivery to; ttoledo@picassoltg.com. Picasso Lighting will send a field technician to the site to evaluate the said defective product. We do accept field repair from licensed electrical contractors but not without a written agreement signed by Picasso Lighting official. Failure to adhere to all warranty and certifications will void any recompense and the warranty.

Note: Picasso lighting industries, LLC reserves the right to make any design changes which will not affect the overall appearance or performance of the product. All ceilings to be adequately reinforced by others. All fixtures to be wired by licensed electrician only. The information contained herein is the sole property of Picasso Lighting Industries, LLC and may not be used without prior written consent of Picasso Lighting Industries, LLC. The 'USGBC member logo' is a trademark owned by the U.S. Green building council and is used by permission. The logo signifies only that Picasso Lighting Industries, LLC is a USGBC member; USGBC does not review, certify, or endorse the products or services offered by its members.